Ultra-Track Pans®

BELOW GRADE PIPING INSTALLATION

Rev 01.12.2024

Survey to design correct slope for piping:

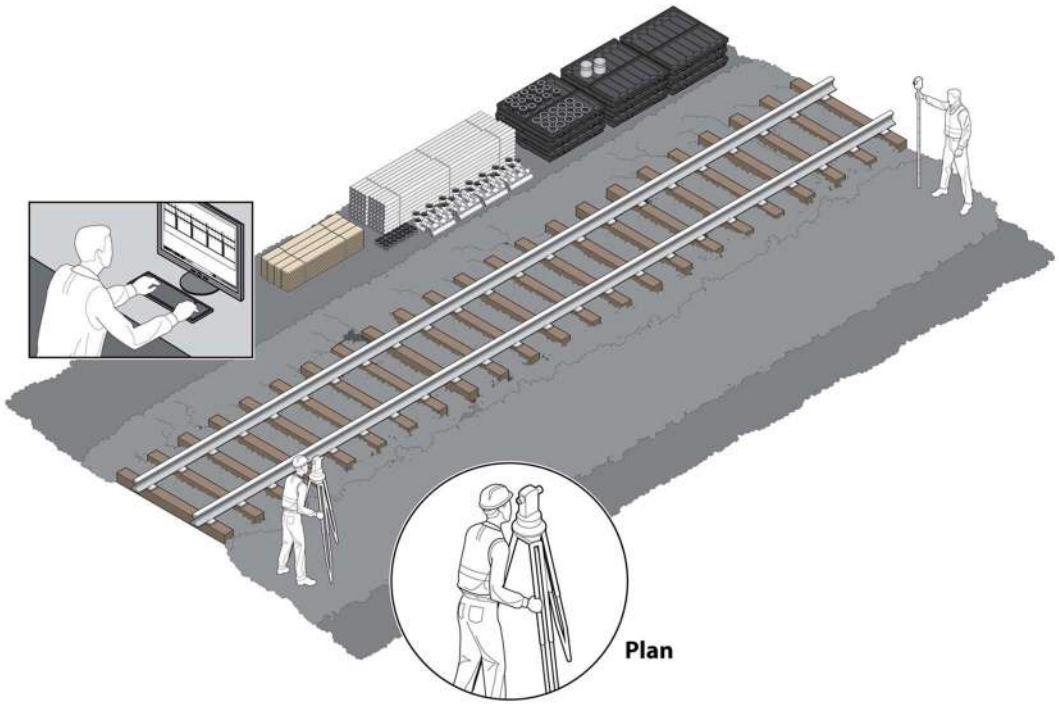

Excavation:

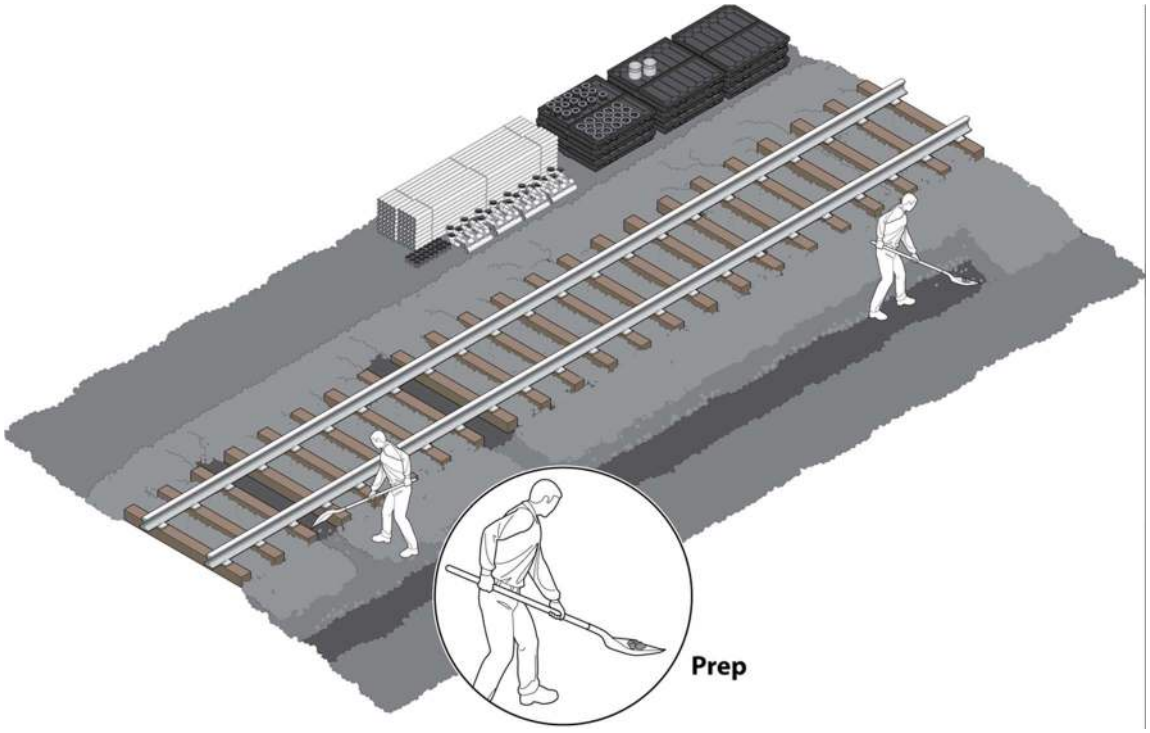





Early state pipe installation:

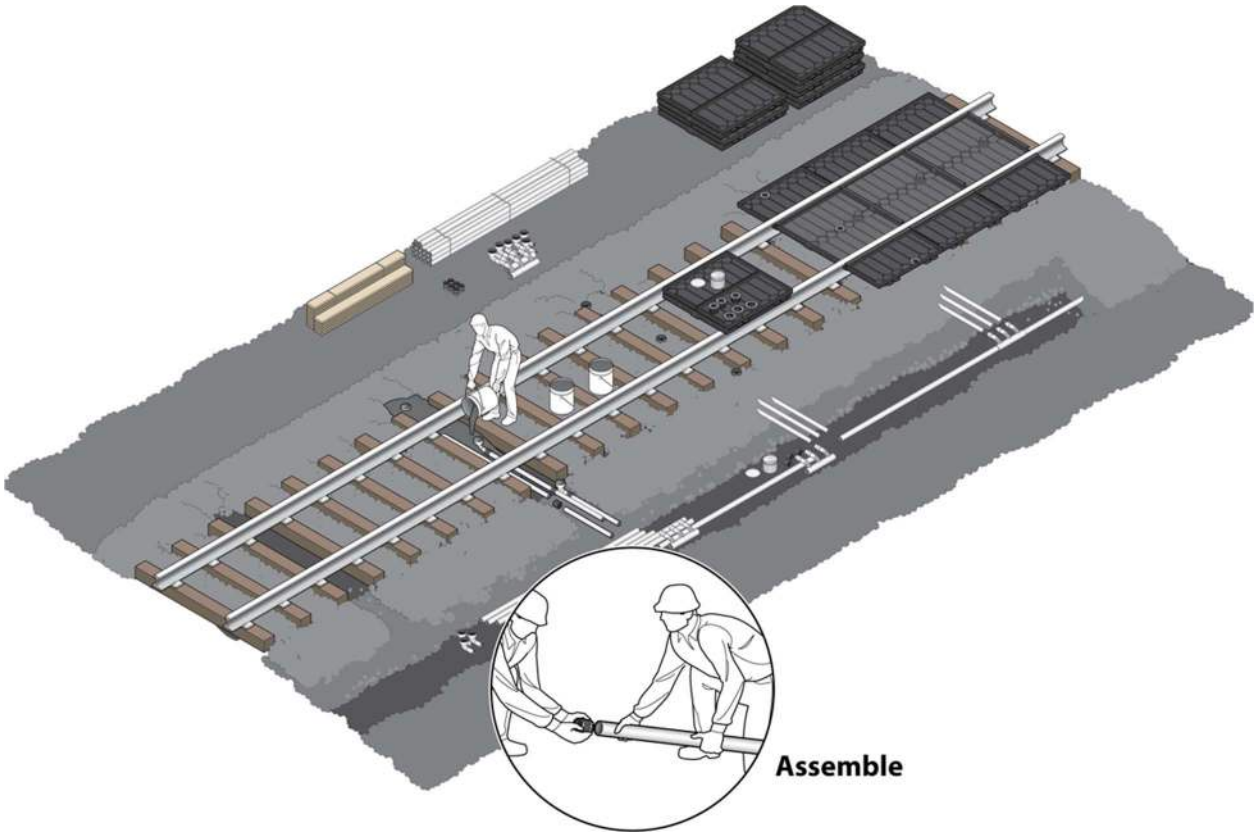

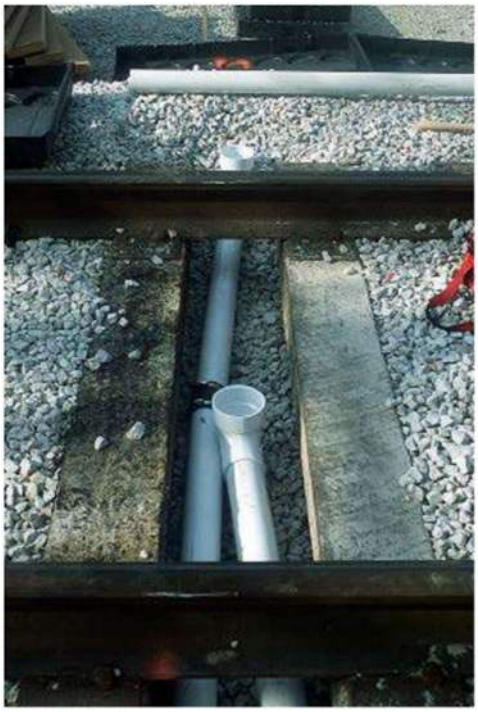



Pan Installation:





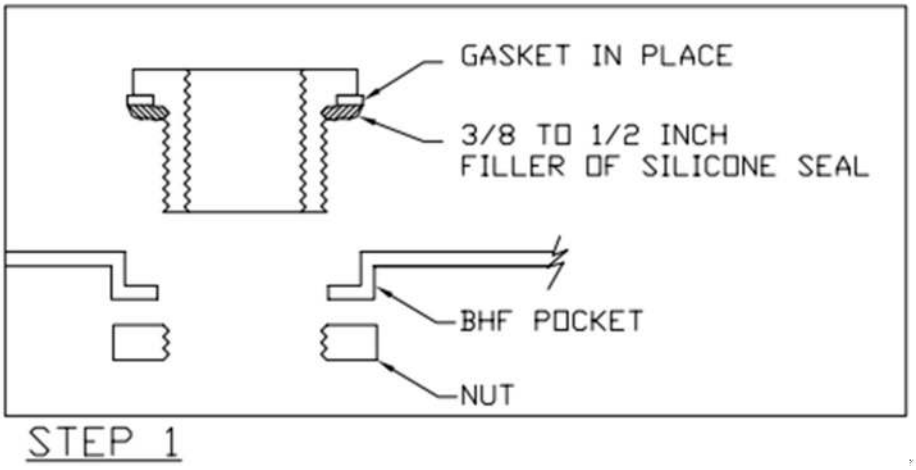

STEP 1

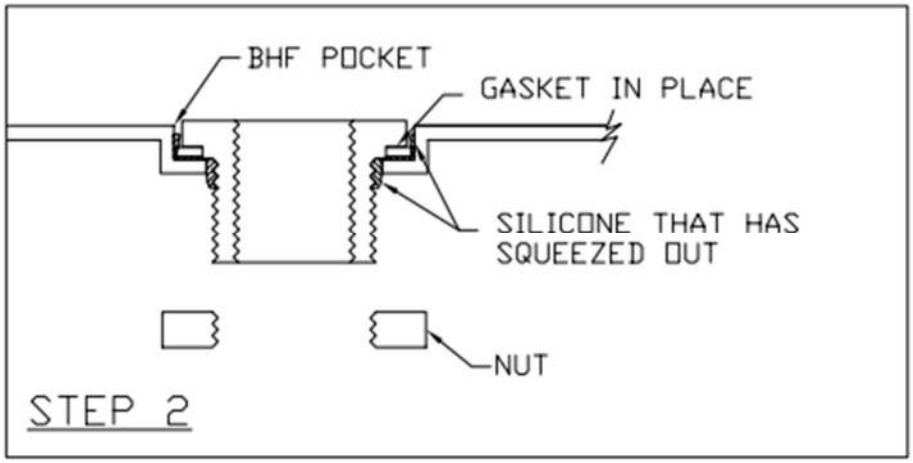
BHF POCKET
GASKET IN PLACE
SILICONE THAT HAS SQUEEZED OUT
NUT
STEP 2

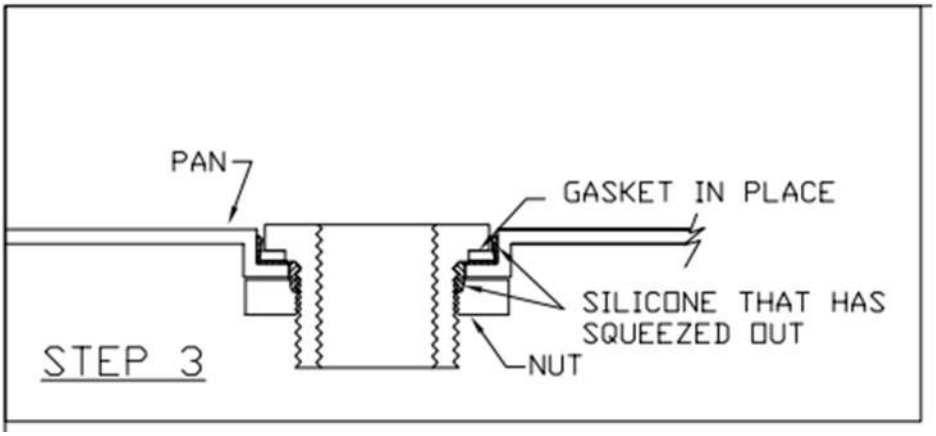
PAN
GASKET IN PLACE
SILICONE THAT HAS SQUEEZED OUT
NUT
STEP 3

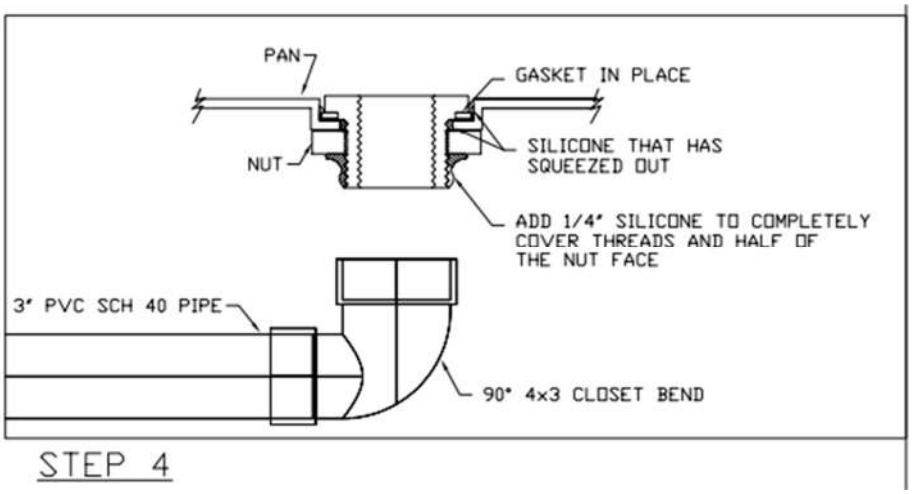
PAN
GASKET IN PLACE
NUT
SILICONE THAT HAS SQUEEZED OUT
ADD 1/4" SILICONE TO COMPLETELY COVER THREADS AND HALF OF THE NUT FACE
3" PVC SCH 40 PIPE
90° 4x3 CLOSET BEND
STEP 4

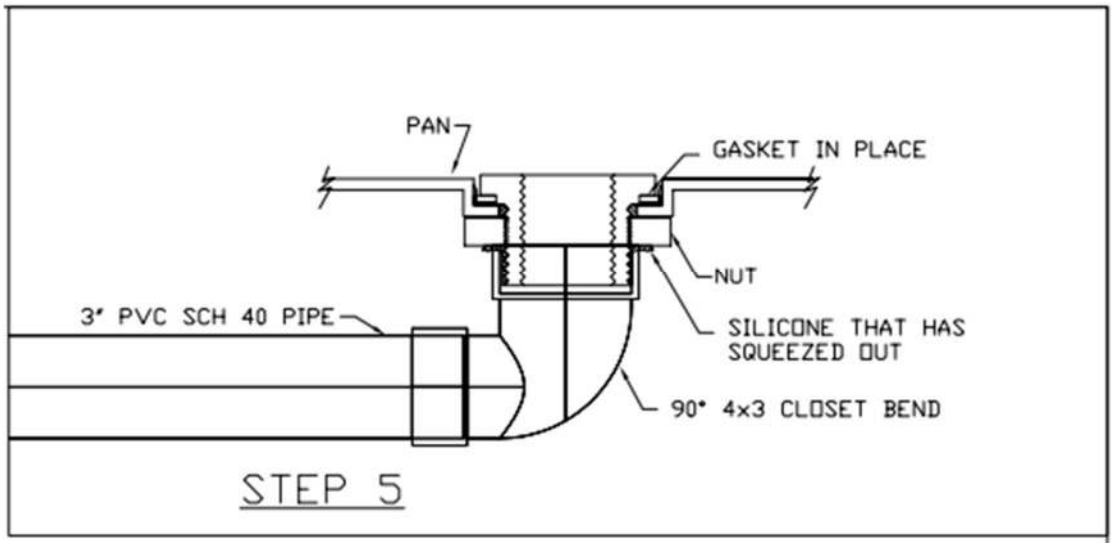
PAN
GASKET IN PLACE
NUT
3" PVC SCH 40 PIPE
SILICONE THAT HAS SQUEEZED OUT
90° 4x3 CLOSET BEND
STEP 5

Backfill:



Finished Installation:

